Surname	Centre Number	Candidate Number
First name(s)		0

GCSE

3400UB0-1

S23-3400UB0-1

TUESDAY, 16 MAY 2023 – MORNING

BIOLOGY – Unit 2:
Variation, Homeostasis and Micro-organisms
HIGHER TIER

1 hour 45 minutes

For Examiner's use only		
Question	**Maximum Mark**	**Mark Awarded**
1.	**11**	
2.	**9**	
3.	**4**	
4.	**5**	
5.	**6**	
6.	**8**	
7.	**8**	
8.	**17**	
9.	**12**	
Total	**80**	

3400UB01
01

ADDITIONAL MATERIALS

In addition to this paper you may require a calculator and a ruler.

INSTRUCTIONS TO CANDIDATES

Use black ink or black ball-point pen. Do not use gel pen or correction fluid.

You may use pencil for graphs and diagrams only.

Write your name, centre number and candidate number in the spaces at the top of this page.

Answer **all** questions.

Write your answers in the spaces provided in this booklet. If you run out of space, use the additional page at the back of the booklet, taking care to number the question(s) correctly.

INFORMATION FOR CANDIDATES

The number of marks is given in brackets at the end of each question or part-question.

Question **9**(b) is a quality of extended response (QER) question where your writing skills will be assessed.

JUN233400UB0101

© WJEC CBAC Ltd.

Examiner only

Answer **all** questions.

1. **Image 1.1** shows a section through a human kidney.

Image 1.1

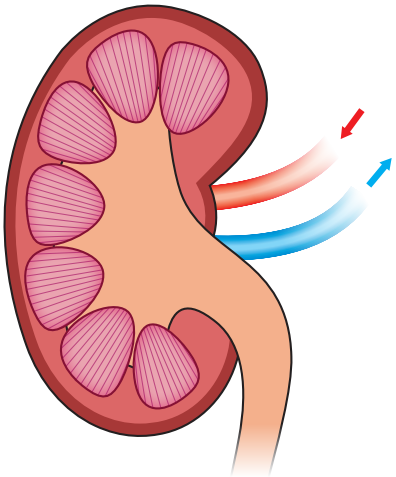

(a) **Draw arrows on Image 1.1** to label the following parts: [2]

(i) the medulla;

(ii) the renal artery.

(b) **Table 1.2** shows the results of an investigation on a patient in a hospital.

Table 1.2

Substance	Concentration in blood entering kidney (au)	Concentration in blood leaving kidney (au)	Present in urine (✓ or ×)
glucose	145	32	✓
protein	120	120	.....
urea	93	0	.....

(i) I. **Complete Table 1.2** to show which substance(s) would be present in the urine of this patient. One row has been done for you. [1]

II. State which **one** of the substances is a waste product. [1]

.....

III. Doctors suggested that this patient had diabetes. From **Table 1.2**, state the evidence to support this suggestion. [1]

.....

.....

© WJEC CBAC Ltd.

Examiner only

(ii) Describe the chemical tests which could be carried out to confirm whether or not the urine contained glucose and protein. For each test state the colours you would expect **for the results shown in Table 1.2**.

I. glucose test [3]

.....

.....

.....

II. protein test [2]

.....

.....

(iii) **Complete the risk assessment** below which shows one hazard linked to these tests. [1]

Hazard	Risk	Control measure
Chemical reagent is an irritant	....	....

3400UB01 03

11

© WJEC CBAC Ltd.

Examiner only

2. **Image 2.1** shows the structure of the human immuno-deficiency virus (HIV).

In some of the people who have an HIV infection, the virus can lead to the disease AIDS, which can be fatal.

Image 2.1

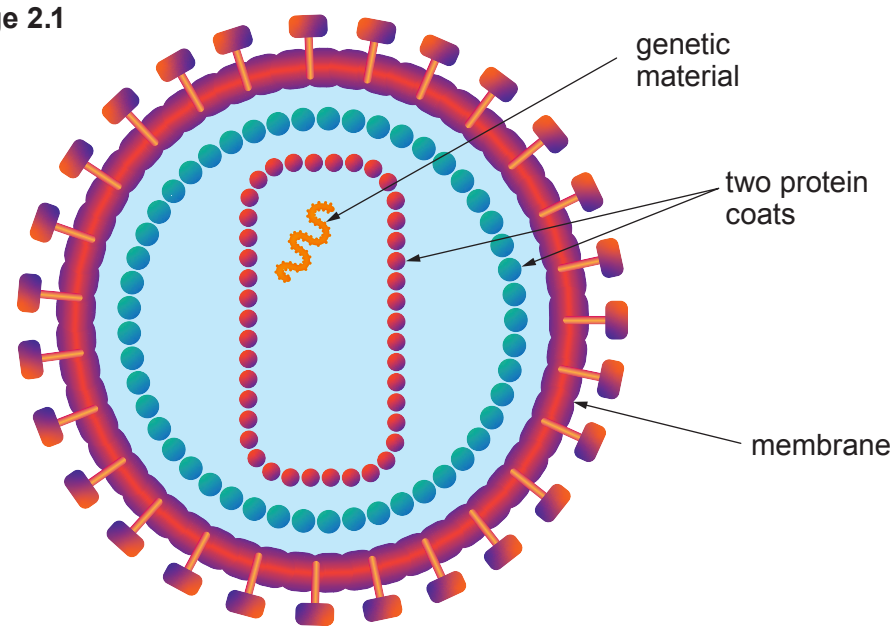

(a) State **two** ways, visible in **Image 2.1**, in which the structure of HIV is different from other viruses. [1]

1. .....

2. .....

(b) State how HIV is spread from one person to another and **one** measure which can be taken to reduce the spread. [2]

.....

.....

.....

© WJEC CBAC Ltd.

Examiner only

(c) In 2000, the United Nations set a target that 90% of people with HIV should be receiving treatment. This treatment should be effective at reducing the number of people developing AIDS.

By 2010, 97% of people with HIV in the UK were being treated with the anti-viral drug, HAART.

Graph 2.2 shows the results from investigations on the effectiveness of HAART.

Graph 2.2

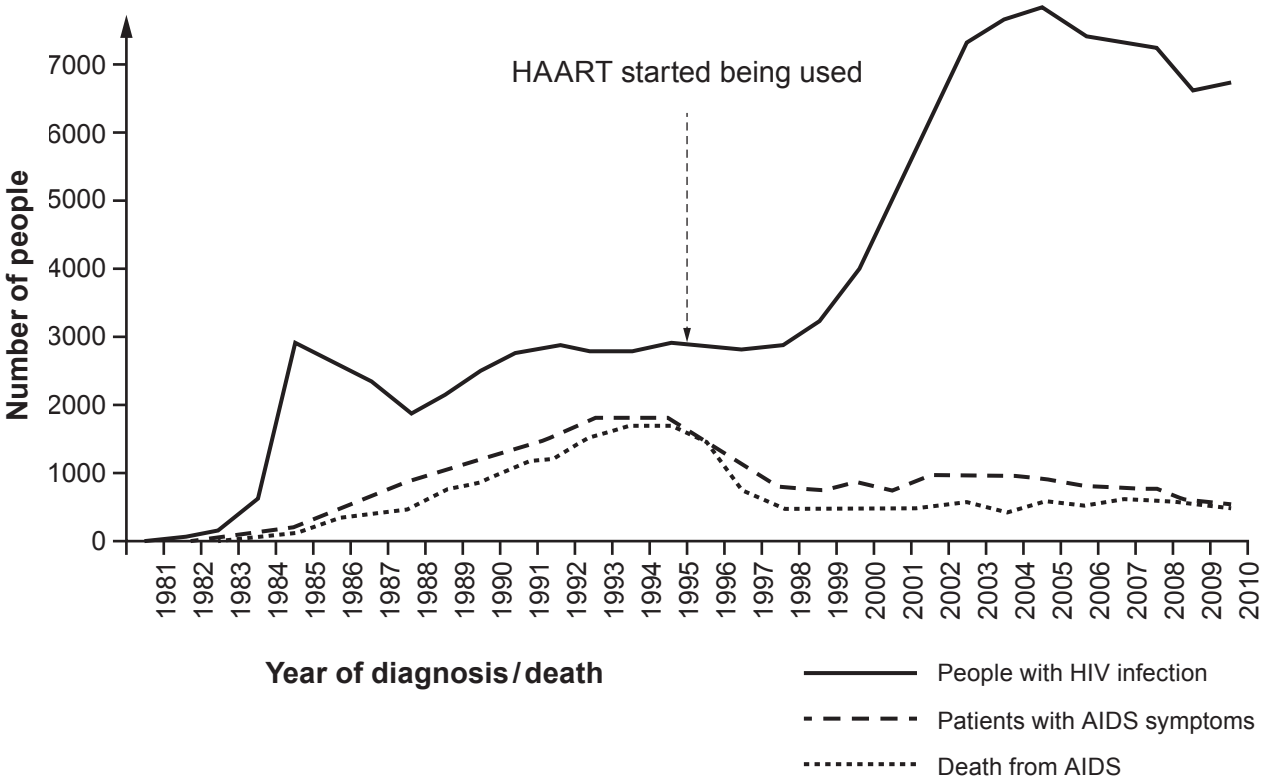

Using the information provided on this page, give the evidence that by 2010 the UK had met the UN target by

(i) providing treatment to enough people; [1]

.....

(ii) providing treatment which was effective. [1]

.....

.....

3400UB01 05

© WJEC CBAC Ltd.

Examiner only

(d) **Graph 2.3** shows the percentages of people in different age groups in the UK who were known to be infected with HIV in 2017. The total number of infected people was 101 610.

Graph 2.3

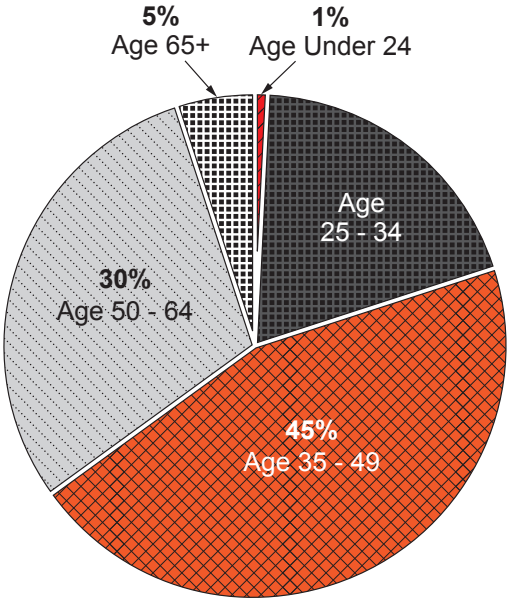

People infected with HIV in the UK

From the information given above calculate

(i) **the percentage** of people in the 25–34 age group, [1]

..... %

(ii) the **number** of people in the 35–49 age group. [2]

..... people.

(iii) Most campaigns which encourage people to take treatment for HIV infections are targeted at those under 35. Some charities, however, say it would be more effective to target campaigns at older age groups.

Using the information in **Graph 2.3**, state **one** piece of evidence which supports the point of view of some charities. [1]

.....

9

© WJEC CBAC Ltd.

Examiner only

3. (a) **Image 3** shows how the optimum body temperature is maintained.

Image 3

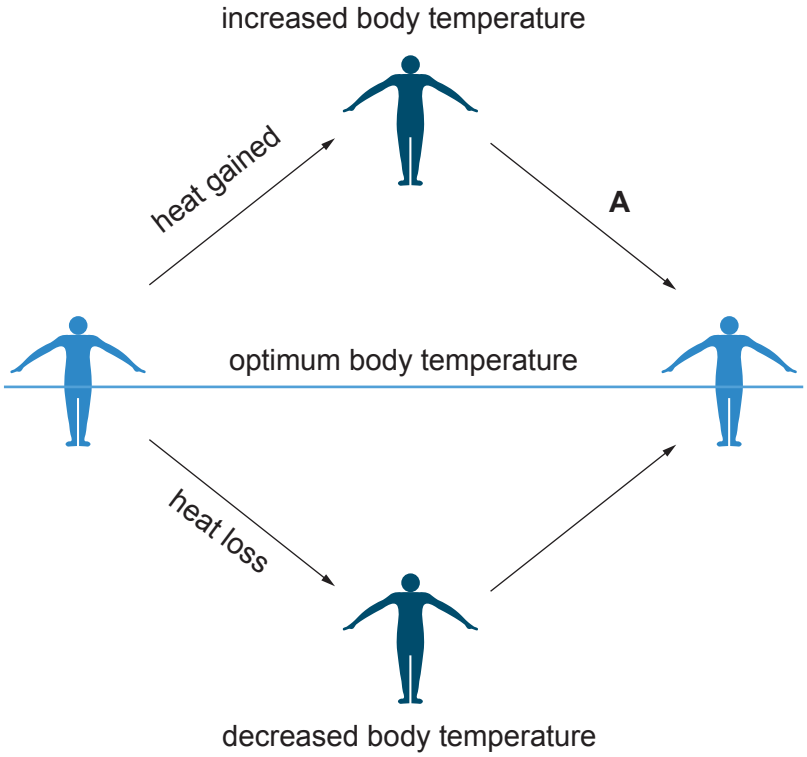

(i) State the name of the **mechanism** which maintains optimum body temperature.[1]

.....

(ii) State why it is important that human body temperature remains between 36.5 °C and 37.5 °C. [1]

.....

.....

(iii) Apart from sweating, describe and explain **one** way the skin would have responded at point **A** on **Image 3** to return the body temperature to its optimum. [2]

.....

.....

.....

.....

.....

.....

4

3400UB01 07

© WJEC CBAC Ltd.

Examiner only

4. In a school experiment, germinating seeds were pinned to a cork plate (**which was not rotating**) and left in the dark for 48 hours.

The result of the experiment is shown in **Image 4.1**.

Image 4.1

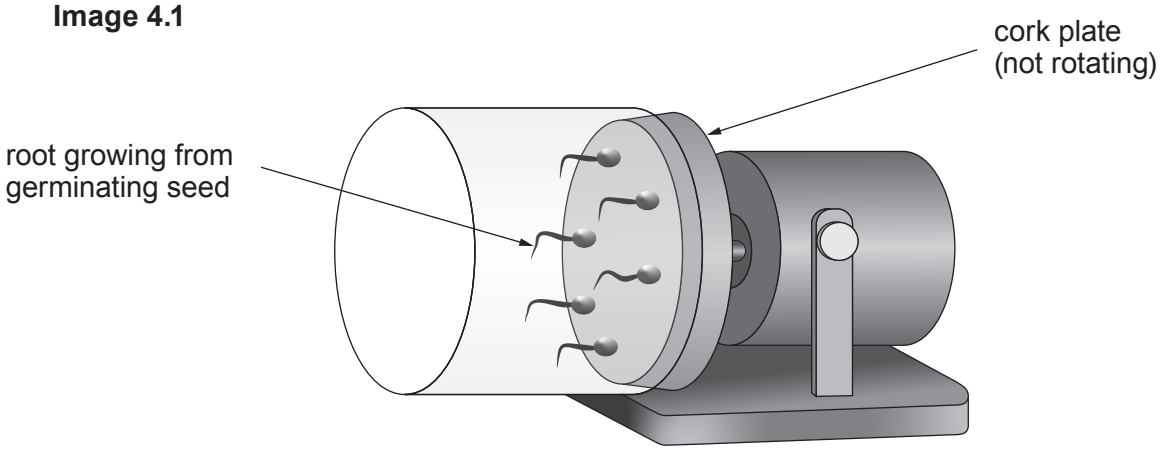

(a) State the name of the:

(i) growth response shown by the germinating roots in **Image 4.1**; [1]

.....

(ii) hormone which controls growth responses in plants. [1]

.....

© WJEC CBAC Ltd.

Examiner only

A second experiment was set up where germinating seeds were pinned to a cork plate which rotated three times per hour. The apparatus was left in the dark for 48 hours.

The result of the experiment is shown in **Image 4.2**.

Image 4.2

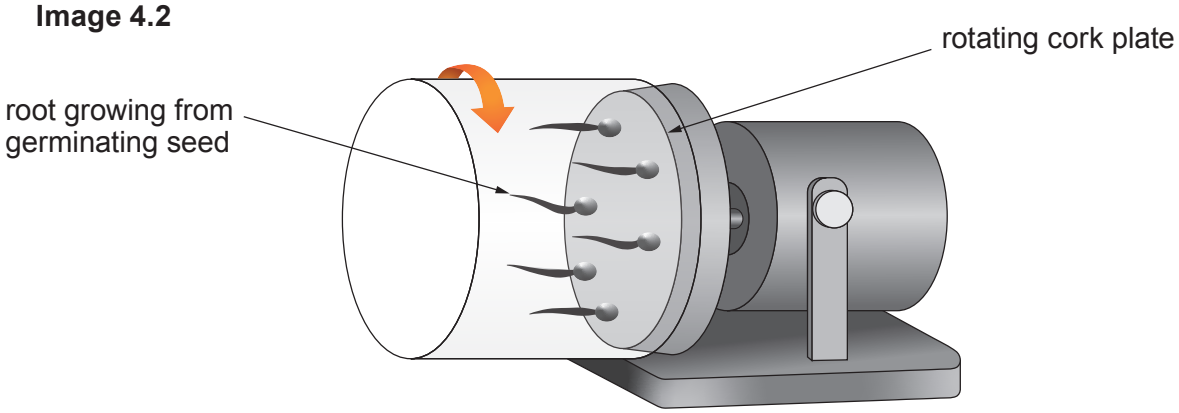

(b) Explain the growth of the roots in the result shown in **Image 4.2**. [2]

.....

.....

.....

.....

(c) Suggest why the apparatus was kept in the dark for 48 hours. [1]

.....

.....

5

3400UB01 09

© WJEC CBAC Ltd.

5. In 2018, scientists announced they had produced a laboratory grown oesophagus using a rat oesophagus and human adult stem cells. This was part of on-going research by scientists into different ways of producing organs for transplants.

Image 5 outlines the procedure.

Image 5

Step 1: An oesophagus was removed from a rat	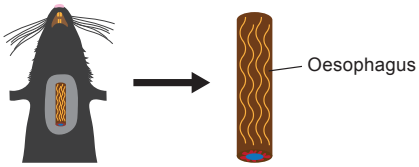
Step 2: All the rat cells were removed from the oesophagus leaving only a protein scaffold	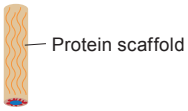
Step 3: Human adult stem cells were added to the protein scaffold	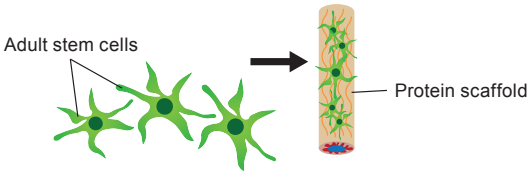
Step 4: The protein scaffold with human adult stem cells was placed in a bioreactor. A bioreactor is a machine which maintains optimum conditions for cell growth	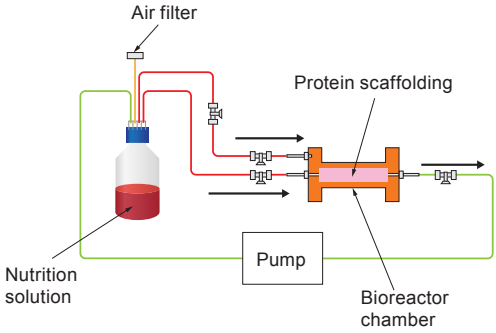
Step 5: At 11 days, the oesophagus was removed from the bioreactor	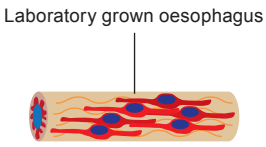

© WJEC CBAC Ltd.

Examiner only

(a) (i) State the meaning of the term stem cell. [1]

.....

.....

(ii) State the name of the type of cell division which occurs during **Step 4**. [1]

.....

(iii) Suggest **one** advantage of using adult stem cells rather than embryonic stem cells in the process shown in **Image 5**. [1]

.....

.....

(iv) Suggest **two** variables which need to be controlled in the bioreactor. [2]

.....

.....

(b) State **one** reason why animal-rights groups might oppose this type of research. [1]

.....

.....

6

3400UB01 11

© WJEC CBAC Ltd.

6. A class of students compared the effects of two antibiotics and an extract from the seeds of moringa plants on the growth of bacteria.
Each group of students was given two agar plates. One plate had bacterium *B.cereus* growing on it whilst the other had the bacterium *E.coli* growing on it.
The students used aseptic techniques to place three filter paper discs labelled **A**, **B** and **C** on each plate. Each disc had each been soaked in one of the following solutions as shown in **Table 6.1**.

Table 6.1

Filter paper disc	Solution
A	moringa seed extract
B	penicillin (an antibiotic)
C	tetracycline (an antibiotic)

The plates were incubated for 24 hours. The results are shown in **Image 6.2**.

Image 6.2

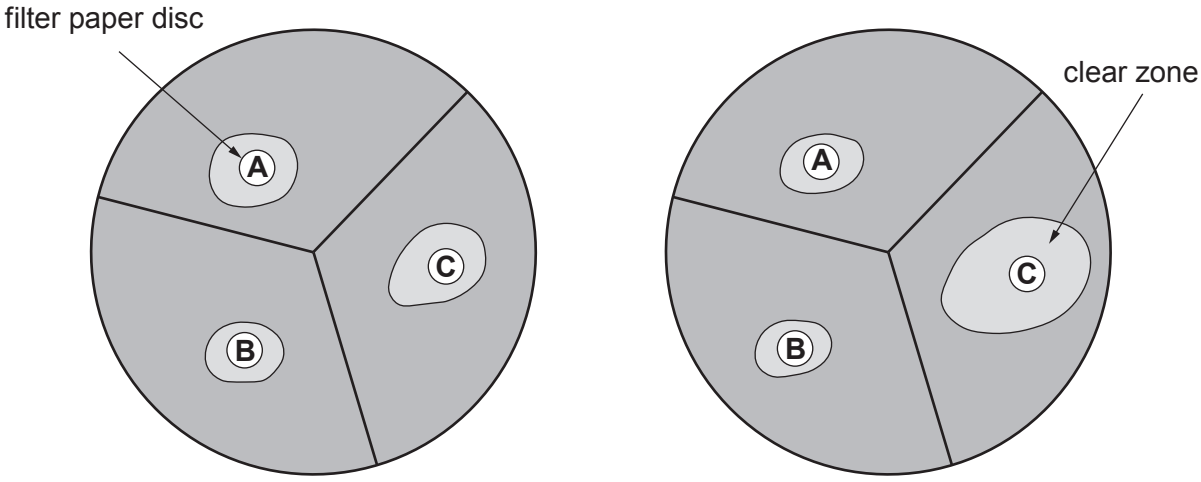

Agar plate containing *B.cereus* **Agar plate containing *E.coli***

The students measured the diameter of the clear zones and recorded them in **Table 6.3**.

Table 6.3

Bacterium	Diameter of clear zone (mm)		
	Disc **A** moringa seed extract	Disc **B** penicillin	Disc **C** tetracycline
B.cereus	11	8	12
E.coli	9	8	18

© WJEC CBAC Ltd.

Examiner only

(a) (i) State **two** steps the students would have used to maintain aseptic conditions whilst placing the discs on each plate. [2]

.....

.....

.....

.....

(ii) State a suitable temperature the students would have used to incubate the agar plates in a school laboratory. [1]

..... °C

(b) (i) Explain how the clear zones formed on the agar plates shown in **Image 6.2**. [2]

.....

.....

.....

.....

(ii) State **two** conclusions which can be made about the effect of the moringa seed extract on the growth of bacteria compared to the two antibiotics. [2]

.....

.....

.....

.....

.....

.....

.....

.....

(c) Suggest **one** way in which each group of students in the class could have increased the validity of their conclusions. [1]

.....

.....

8

© WJEC CBAC Ltd.

BLANK PAGE

PLEASE DO NOT WRITE ON THIS PAGE

© WJEC CBAC Ltd.

7. Barnacles are small animals that grow on rocks at the seashore.
Two species of barnacle native to the British Isles, *Chthamalus stellatus* and *Semibalanus balanoides* are shown in the photographs in **Image 7.1**.

Image 7.1

C. stellatus

S. balanoides

Students carried out a survey to test the following hypothesis:

C. stellatus is found further up the seashore towards the high water mark.
S. balanoides is found lower down the seashore towards the low water mark.

Image 7.2

Photograph of students carrying out their survey

© WJEC CBAC Ltd.

Examiner only

The students measured the abundance and distribution of barnacles between the high water mark and the low water mark on the seashore. The results of their survey are shown in **Table 7.3**.

Table 7.3

Distance from high water mark (m)	Number of barnacles	
	C. stellatus	*S. balanoides*
0 (high water mark)	0	0
5	13	0
10	28	0
15	36	0
20	52	3
25	57	25
30	29	41
35	17	51
40	0	60
45	0	42
50 (low water mark)	0	0

(a) Describe the method the students would have used to measure the abundance and distribution of barnacles between the high and low water mark. [3]

.....

.....

.....

.....

.....

.....

.....

.....

© WJEC CBAC Ltd.

Examiner only

(b) (i) State **two environmental** factors which could affect the population of barnacles. [2]

I. .....

II. .....

(ii) Calculate the ratio of *C. stellatus* to *S. balanoides* at the **25 m** mark. [1]
Space for working.

C. stellatus ..... : *S. balanoides* .....

(iii) State the type of competition occurring between the two species of barnacles at the 25 m mark. [1]

.....

(iv) State whether the results of the survey support the students' hypothesis (given on page 15). Use the data provided in **Table 7.3** to give a reason for your answer. [1]

.....

.....

.....

8

© WJEC CBAC Ltd.

Examiner only

8. Haemochromatosis is a genetic condition which causes the body to absorb more iron than normal from the diet. The excess iron is stored in the body's tissues and organs where it can cause damage. The condition mainly affects people of Northern European origin.

Haemochromatosis is caused by a mutation to the HFE gene. The HFE gene provides instructions for producing a protein which regulates iron levels in liver cells. The mutant allele is recessive to the normal allele.

(a) (i) State the meaning of the following terms:

I. gene; [1]

.....

.....

II. mutation. [1]

.....

.....

(ii) State the scientific technique which could be used to identify the presence of the mutant HFE allele. [1]

.....

© WJEC CBAC Ltd.

Examiner only

(b) **Table 8.1** shows the amino acids coded for by each triplet code of DNA.

Table 8.1

Second letter

First letter	T	C	A	G	*Third letter*
T	TTT, TTC **phe** TTA, TTG **leu**	TCT, TCC, TCA, TCG **ser**	TAT, TAC **tyr** TAA stop TAG stop	TGT, TGC **cys** TGA stop TGG **trp**	T C A G
C	CTT, CTC, CTA, CTG **leu**	CCT, CCC, CCA, CCG **pro**	CAT, CAC **his** CAA, CAG **gln**	CGT, CGC, CGA, CGG **arg**	T C A G
A	ATT, ATC, ATA **ile** ATG **met**	ACT, ACC, ACA, ACG **thr**	AAT, AAC **asn** AAA, AAG **lys**	AGT, AGC **ser** AGA, AGG **arg**	T C A G
G	GTT, GTC, GTA, GTG **val**	GCT, GCC, GCA, GCG **ala**	GAT, GAC **asp** GAA, GAG **glu**	GCT, GGC, GGA, GGG **gly**	T C A G

The DNA base sequences in **Image 8.2** show part of the normal and mutant HFE alleles found at the same position on a pair of chromosomes and part of the order of amino acids for which they code.

(i) Use the information provided in **Table 8.1** to insert the missing amino acids in **Image 8.2**. [2]

Image 8.2

Normal allele	C T T		T G T		A G T
Amino acid sequence	leu	-	…….	-	……..
Mutant allele	C T T		T A T		A G T
Amino acid sequence	leu	-	…….	-	……..

(ii) Explain how the mutant allele will give rise to haemochromatosis. [3]

.....

.....

.....

.....

.....

.....

© WJEC CBAC Ltd.

Examiner only

(c) (i) A woman, who is a carrier of the HFE mutation, and a man, who is affected by the condition are expecting a child.

Complete the Punnett square below to show the possible genotypes of their child. **Use H to represent the normal allele**. [4]

Woman Man

Phenotype ..... × ..... .

Genotype ..... × .....

(ii) State the probability of the couple having a child affected by haemochromatosis. [1]

Probability = ...

© WJEC CBAC Ltd.

Examiner only

(d) Genetic studies suggest the original mutant HFE allele arose in a single person who lived 60 to 70 generations ago. At that time, there was much less iron in people's diet.

Use the theory of natural selection to explain how the genetic condition haemochromatosis spread throughout the Northern European population at that time.

[4]

.....

.....

.....

.....

.....

.....

.....

.....

.....

.....

.....

.....

17

TURN OVER FOR QUESTION 9

© WJEC CBAC Ltd.

Examiner only

9. (a) In 2018–19, there was an outbreak of the Ebola virus disease in the Democratic Republic of the Congo (DRC). A double-blind clinical trial was carried out in four villages on 499 people infected with the Ebola virus. The purpose was to test the effectiveness of four potential treatments against the virus.

Table 9 shows the results halfway through the trial in August 2019.

Table 9

Treatment	Percentage of infected people dying from Ebola following the treatment (%)
REGN-EB3	29
mAb-114	33
ZMapp	49
Remdesivir	53

At the time of the trial, 1900 people out of 2831 confirmed cases of Ebola in other parts of the DRC had died of the disease. None of the 2831 people were part of the trial and so did not receive any of the four treatments above.

(i) Use the information given above to calculate the percentage of confirmed cases of Ebola who received no treatment and died of the disease. **Give your answer to two significant figures.** [2]

Percentage = ...

(ii) The results shown in **Table 9** convinced the scientists to stop using ZMapp and Remdesivir, and place all remaining patients on either REGN-EB3 or mAb-114.

Suggest why the scientists stopped using ZMapp and Remdesivir in August 2019 and placed all the remaining patients on either REGN-EB3 or mAb-114. [1]

.....

.....

.....

(iii) Explain the meaning and importance of double-blind trials. [2]

.....

.....

.....

.....

© WJEC CBAC Ltd.

Examiner only

(iv) This trial did not use a placebo. Suggest why a placebo could be considered unethical in this trial. [1]

.....

.....

(b) mAb-114 is a monoclonal antibody. It was developed using blood samples isolated from an Ebola survivor in 1995.

Outline the pre-clinical stages, in the correct sequence, which would have been carried out before the treatments could be used for clinical trials.
Describe how the monoclonal antibody mAb-114 could have been produced using lymphocytes from a sample of survivor's blood. [6 QER]

.....

.....

.....

.....

.....

.....

.....

.....

.....

.....

.....

.....

.....

.....

.....

12

END OF PAPER

© WJEC CBAC Ltd.

Question number	Additional page, if required. Write the question number(s) in the left-hand margin.	Examiner only

© WJEC CBAC Ltd.